	0.5-3	>3-6	>6-30	>30-120	>120-400		-10	>10-50	>50-120	>120-400
	±0.1	±0.1	±0.2	±0.3	±0.5		±1°	±30'	±20'	±10'

Confidential commercial information.
All rights reserved.

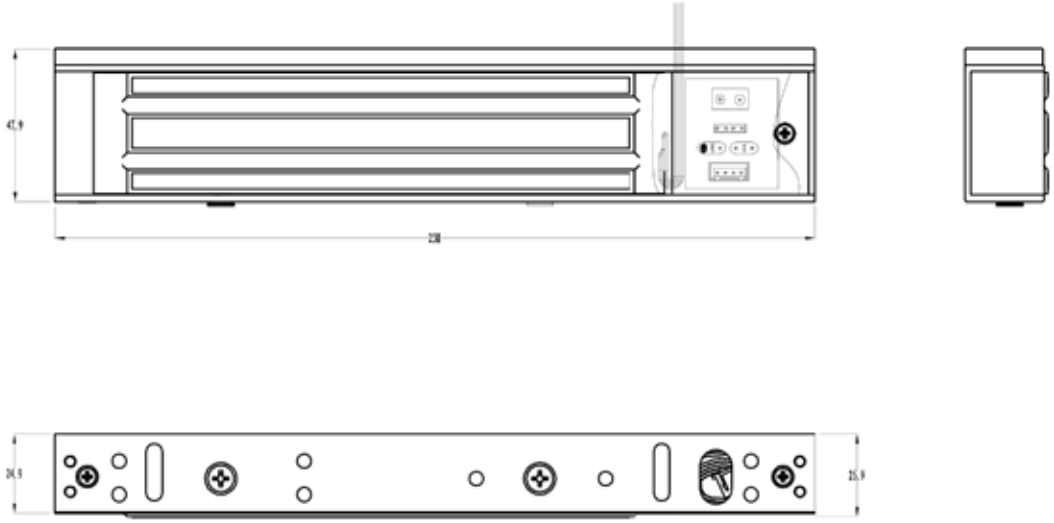

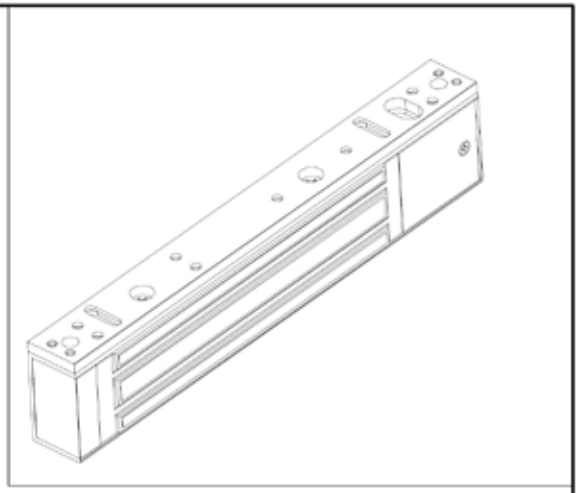

1st angle Proj.

Mark	Date	ECA.	Description	Sign
A	08.03.12	9055	NEW DRAWING	

Unspecified Tol: GB/T1804-m	Scale	1:1	GULI SECURITY PRODUCTS LTD.
Theoretical weight kg	Date	08.03.12	
	Draft		Product Name EE212 Z4
Material	Design		
	Check		Part Name/No. E212-070107-000
Finish	Check		
	Appd.		Dwg. No. E212-070107 A3