	0.5-3	>3-6	>6-30	>30-120	>120-400		-10	>10-50	>50-120	>120-400
	±0.1	±0.1	±0.2	±0.3	±0.5		±1°	±30'	±20'	±10'

Confidential commercial information.
All rights reserved.

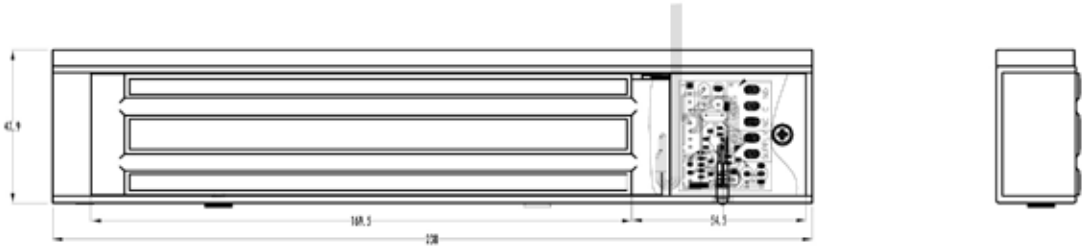

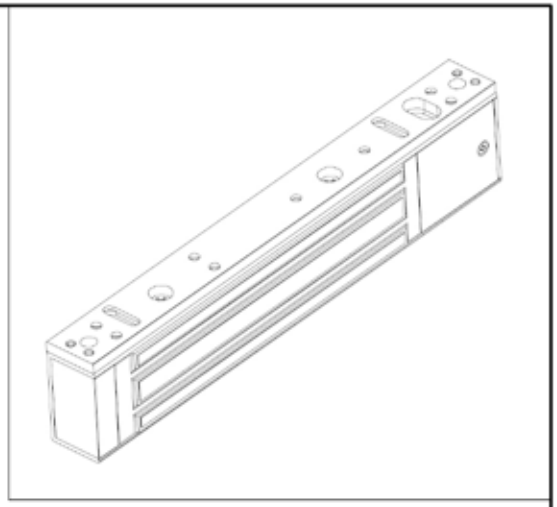

Mark	Date	ECA.	Description	Sign
A	08.03.12	9055		

Unspecified Tol: GB/T1804-m

Theoretical weight kg

Material

Finish

Scale	1:1
Date	08.03.12
Draft	
Design	
Check	
Check	
Appd.	

GULI SECURITY PRODUCTS LTD.

Product Name: EE213 Z4

Part Name/No.: ZSA0161 E213-070107-000

Dwg. No.: E213-070107

A3

1st angle Proj.