	0.5-3	>3-6	>6-30	>30-120	>120-400		-10	>10-50	>50-120	>120-400
	±0.1	±0.1	±0.2	±0.3	±0.5		±1°	±30'	±20'	±10'

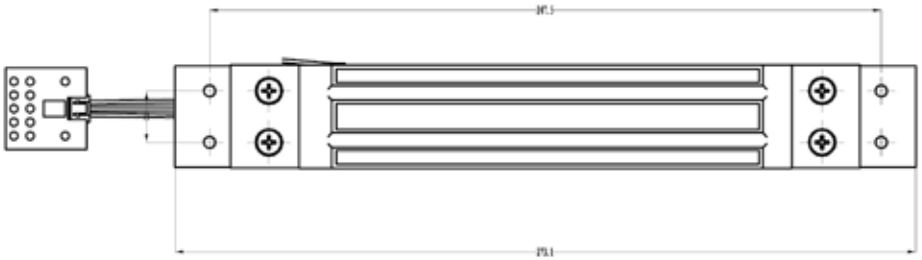

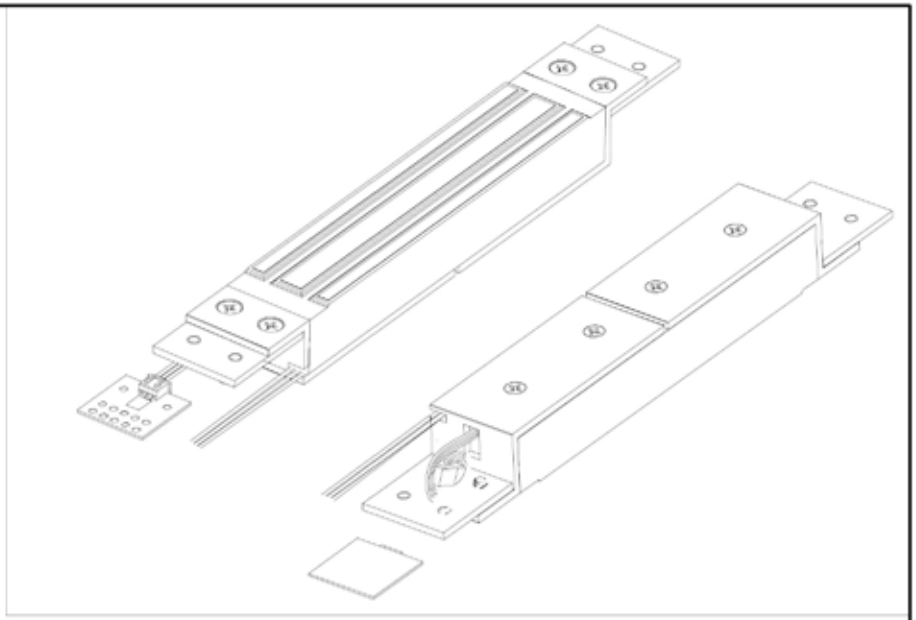

Mark	Date	ECA.	Description	Sign
A	08.03.12	9055		

Unspecified Tol! GB/T1804-m	Scale	1:2	GILI SECURITY PRODUCTS LTD.
Theoretical weight kg	Date	08.03.12	
	Draft		Product Name EE231 Z4R
Material	Design		
	Check		Part Name/No. E231-070107-000
Finish	Check		
	Appd.		Dwg. No. E231-070107 A3

Confidencial commercial information.
All rights reserved.

1st angle Proj.