	0.5-3	>3-6	>6-30	>30-120	>120-400		-10	>10-50	>50-120	>120-400
	±0.1	±0.1	±0.2	±0.3	±0.5		±1°	±30'	±20'	±10'

Confidential commercial information.
All rights reserved.

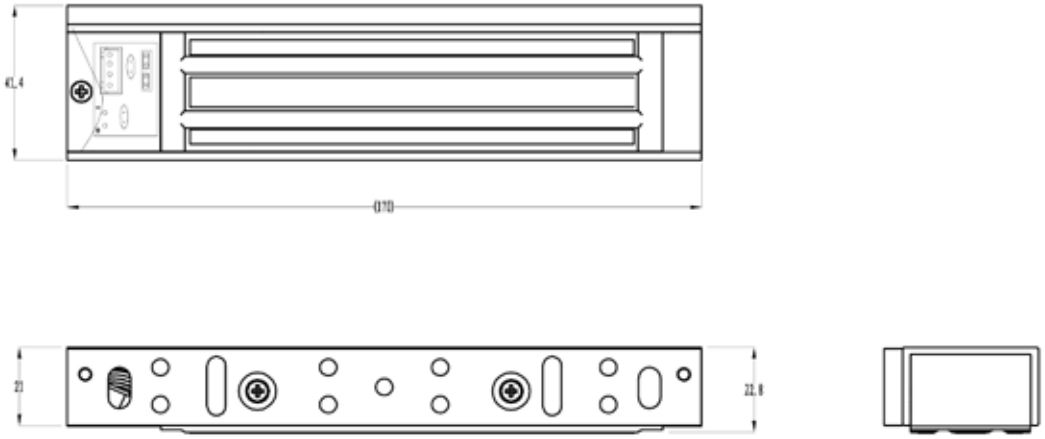

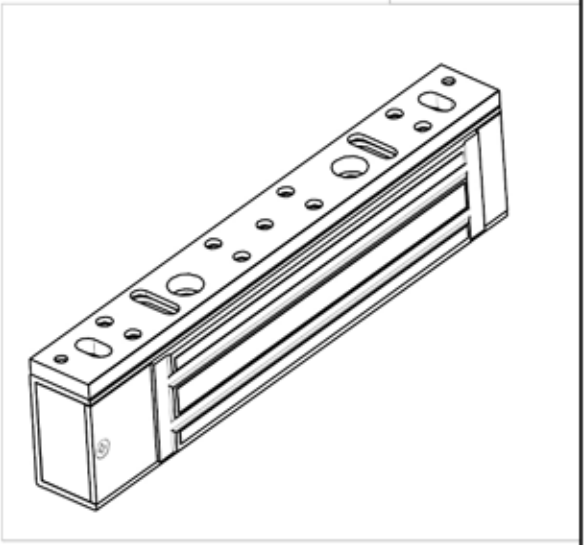

1st angle Proj.

Mark	Date	ECA.	Description	Sign
A	08.03.10	9055		

Unspecified Tol: GB/T1804-m	Scale	1:1
Theoretical weight kg	Date	08.03.10
Material	Draft	
	Design	
	Check	
Finish	Check	
	Appd.	

GULI SECURITY PRODUCTS LTD.

Product Name: EE110 Z2

Part Name/No.: E110-070107-000

Dwg. No.: E110-070107

A3